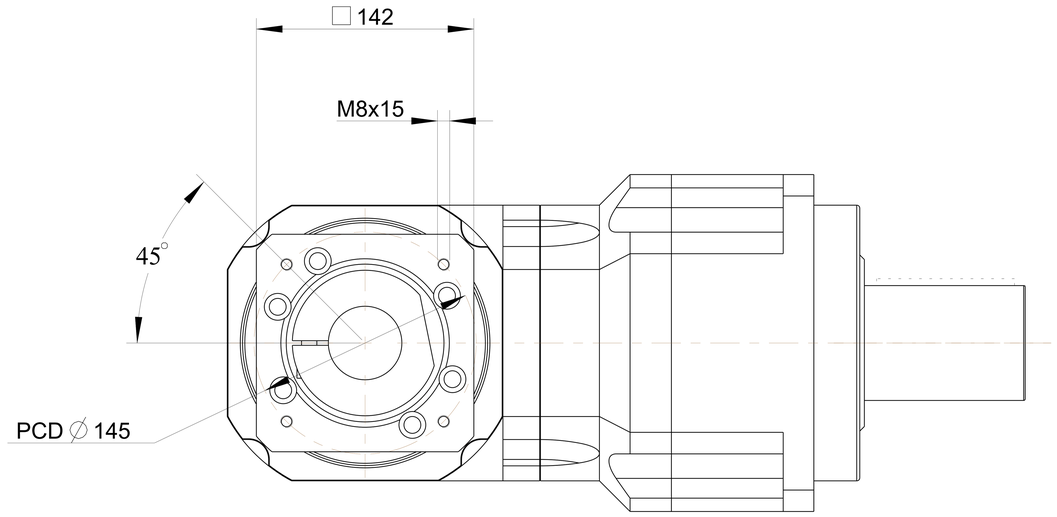

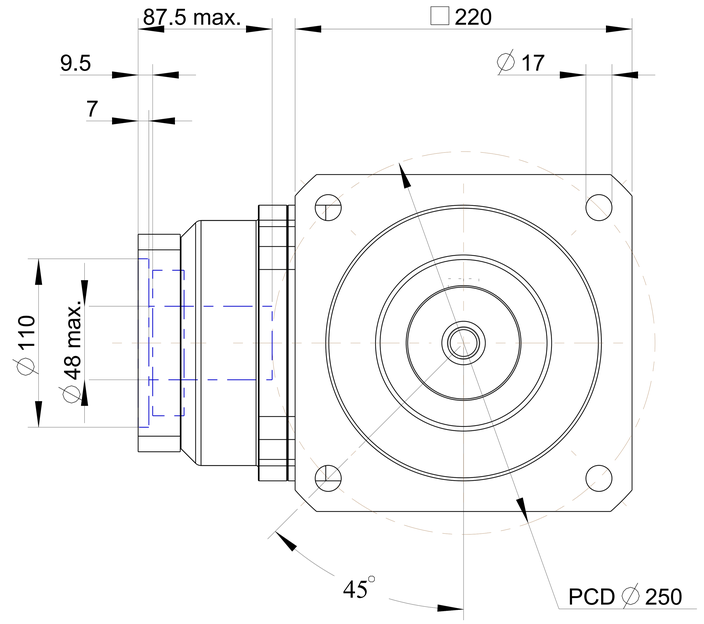

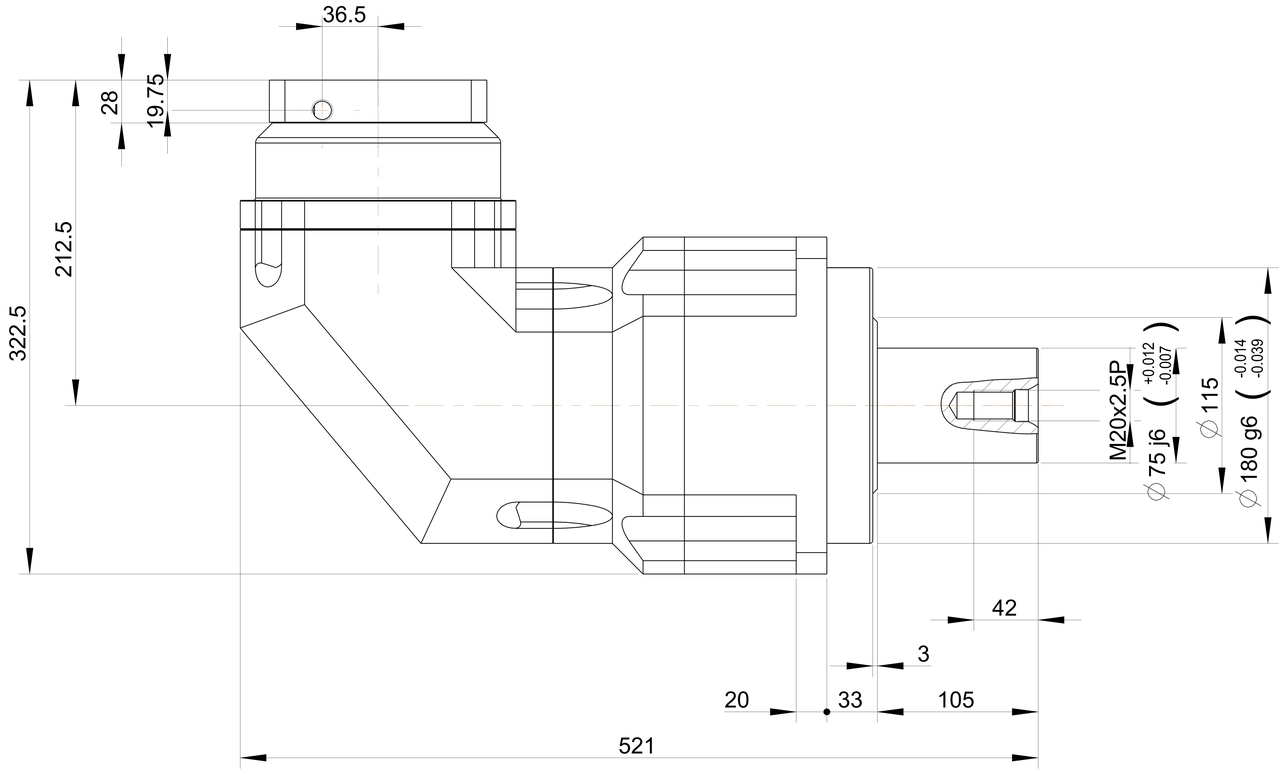

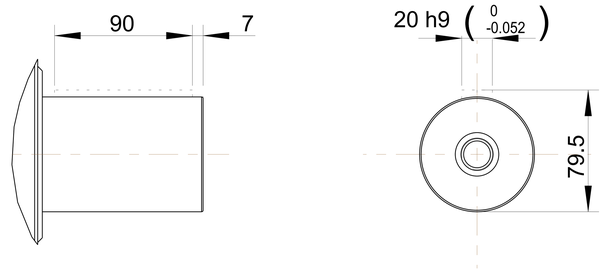

PART NO. AFR2202-P0403600102 AD-P200-M142-2		APEX DYNAMICS, INC.
APPROVALS	DATE	TITLE AFR220 2 STAGES AND MOTOR FLANGE MOUNTING
DRAWN		DWG NO. AFR2202-P0403600102
CHECKED		
APPROVED		SIZE 2A0 / SCALE 1:1 / REV