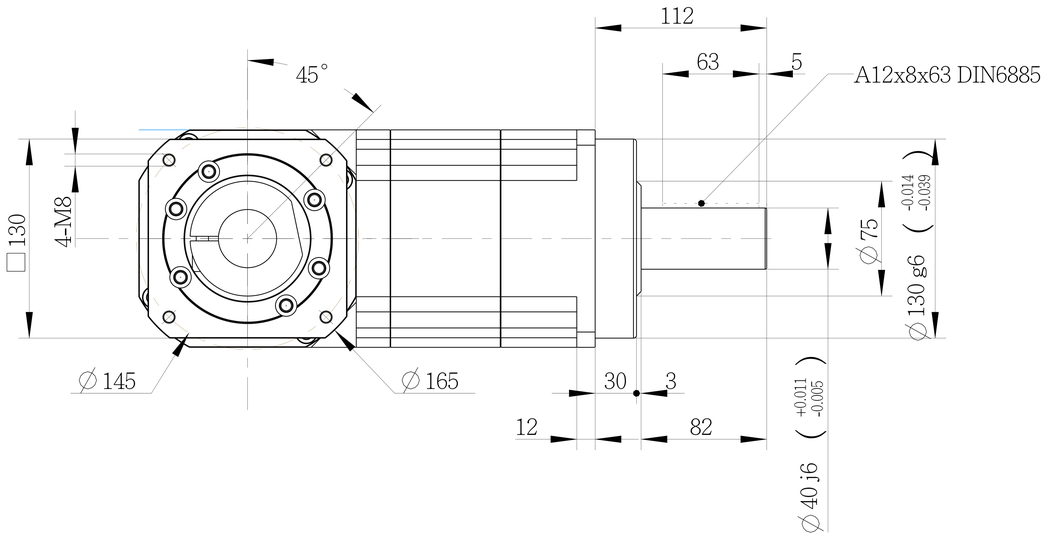

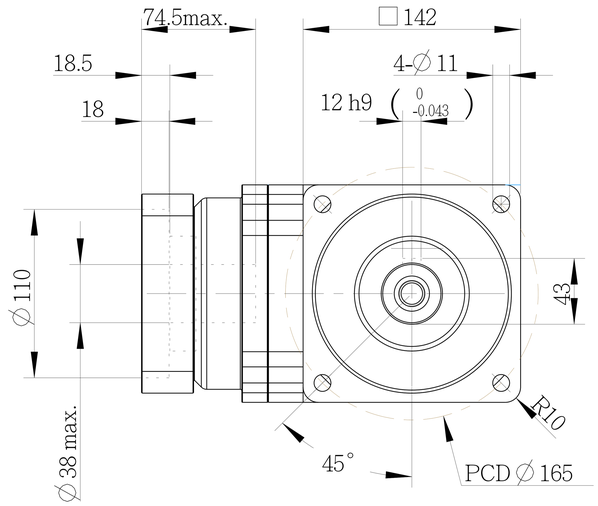

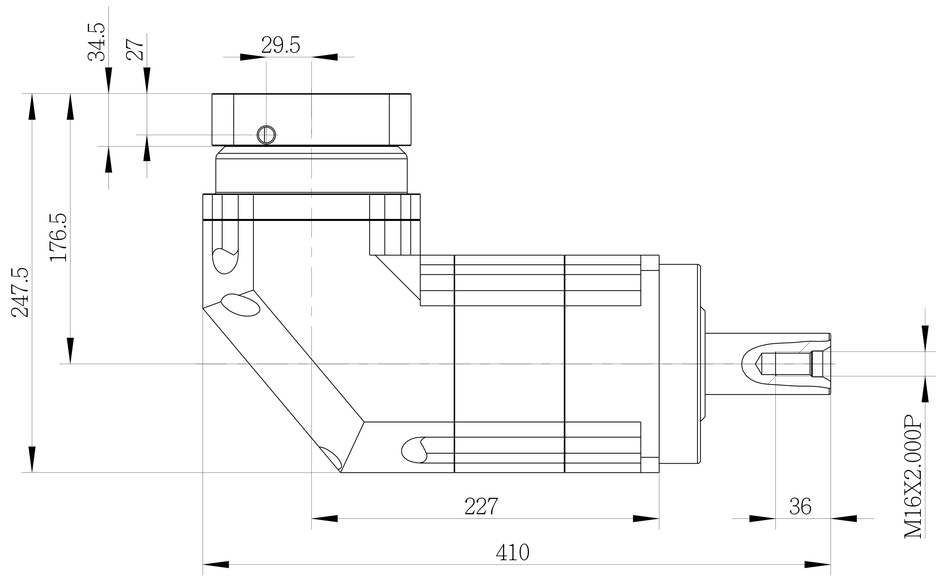

INERTIA: 21.8~23.4kg-cm^2
MASS: 29.2kg

SHAFT OPTION S1: SMOOTH OUTPUT SHAFT(STANDARD)
SHAFT OPTION S2: OUTPUT SHAFT WITH KEYWAY
MICRO BACKLASH<= 4arcmin
REDUCED BACKLASH<= 7arcmin
STANDARD BACKLASH<= 9arcmin

***BUSHING SUPPLIED WHEN MOTOR SHAFT DIAMETER SMALL THAN ∅32

PART NO. AFR140A2-P0403500101 AFR140A-2, AD-P140-M130-1		APEX DYNAMICS, INC.
APPROVALS	DATE	TITLE AFR140A 2 STAGES, RATIO= 25~200 AND MOTOR FLANGE MOUNTING
DRAWN Cindy		DWG NO. AFR140A2-P0403500101
CHECKED		
APPROVED		SIZE 2A0 / SCALE 1:1 / REV

AFR140A-2D2-S2-P2/MTR:SH130 BS:SB152